XXX Check Dim

RoHS

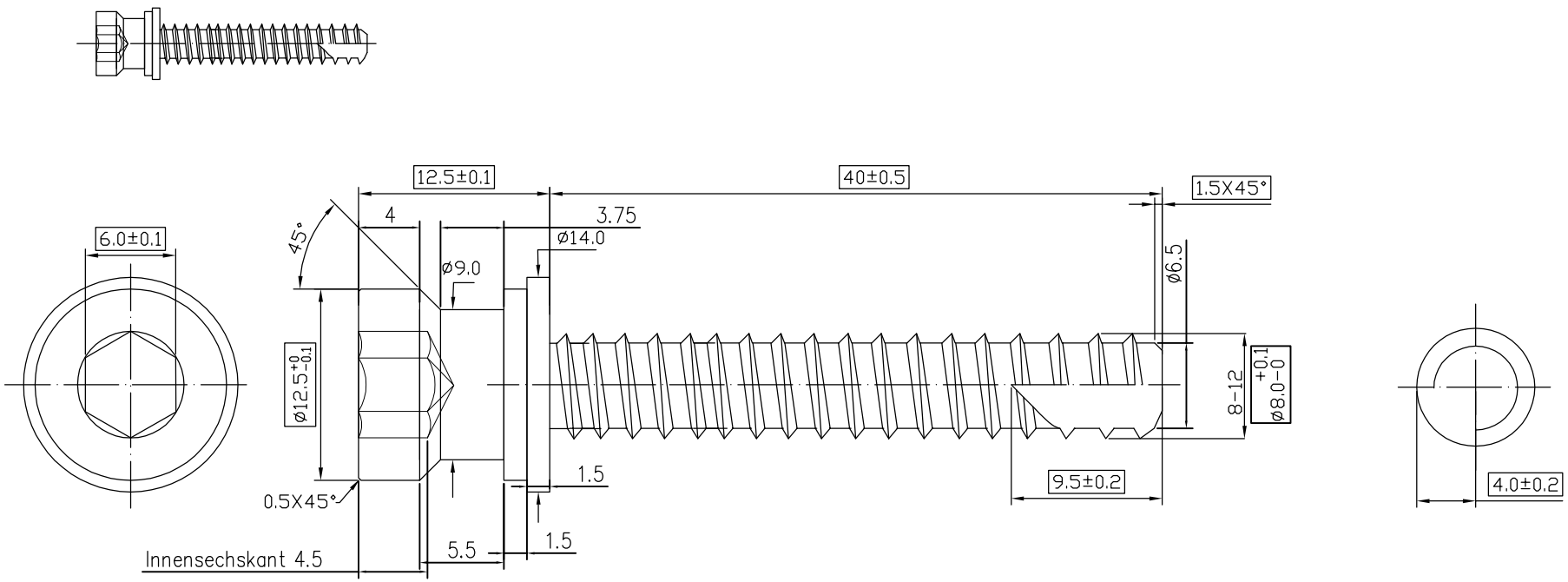

All rights reserved. The copyright (§ 2 Nr.7 UrhG v. 9.9.1965) of this drawing and all relevant documents remain property of Confurn Metall. Without written permission any reproduction in whole or in part is strictly prohibited. This drawing may not be passed on to others especially not to competitors without written permission of Confurn Metall. Any illegal use of this drawing will be procecuted.

Confurn Metall, 32549 Bad Oeynhausen

confurn Metall				Project			Dimension . / .	Weight
							Stainless Steel SUS304	
					Date	Name	SCHRAUBE	
				Resp	09.08.11	FC		
				Check	09.08.11	VH		
				Non-toleranced dimensions: DIN 7168-m			DRAWING-NO.	19052.A
				Tolerances				
				0.5-3	3-6	6-30	30-120	120-400
				+/-0.1	+/-0.1	+/-0.2	+/-0.3	+/-0.5
Pos	Changes (ECN)	Date	Name				ARTICLE-NO.	19052.XXXX