XXX Check Dim

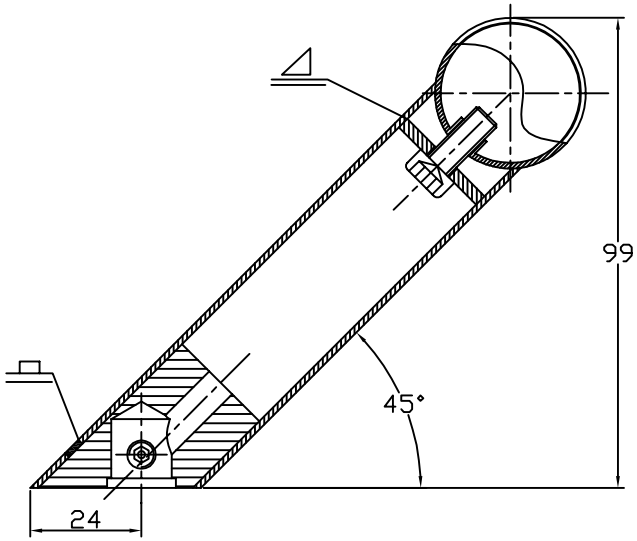

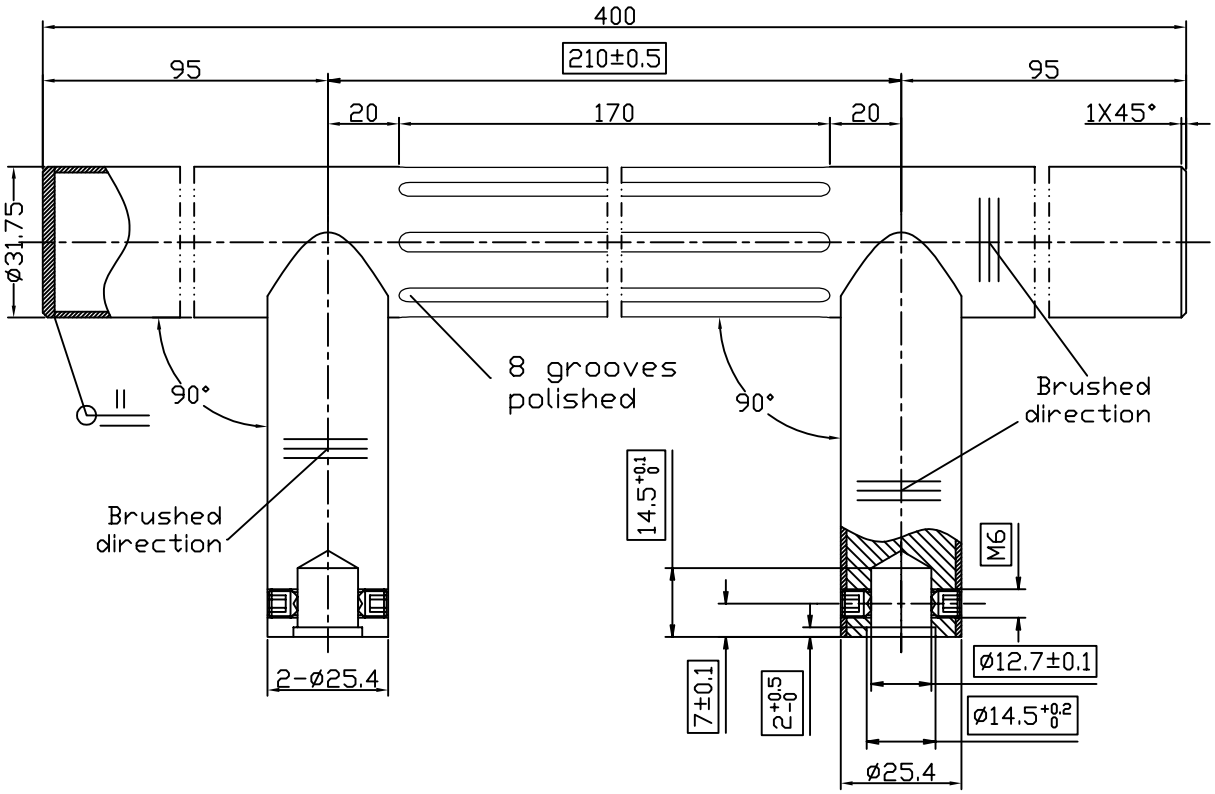

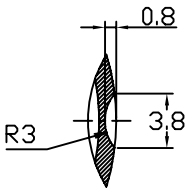

Details of groove dimension (3:1)

Surface:

All rights reserved. The copyright (§ 2 Nr.7 UrhG v. 9.9.1965) of this drawing and all relevant documents remain property of Confurn Metall. Without written permission any reproduction in whole or in part is strictly prohibited. This drawing may not be passed on to others especially not to competitors without written permission of Confurn Metall. Any illegal use of this drawing will be procecuted.

Confurn Metall, 32549 Bad Oeynhausen

confurn Metall

Project

	Date	Name
Resp	05.12.08	FC
Check	05.12.08	ES

Non-toleranced dimensions: DIN 7168-m

Tolerances

0.5-3	3-6	6-30	30-120	120-400
+/-0.1	+/-0.1	+/-0.2	+/-0.3	+/-0.5

Pos	Changes (ECN)	Date	Name

Dimension . / . | Weight

Stainless steel

HANDLE

DRAWING-NO. 12209.0074S.A

ARTICLE-NO. 12209.0074S