Product data sheet

Item number	Surface
14171602026	Satin finish

Offset knob handle

Knud Holscher
collection

Product	Offset pair, snap-on cover, cc 30/38mm, 49-65mm.
Tender text	Knud Holscher collection, knob handle offset pair, 8x8mm, snap-on cover, cc 30/38mm, 49-65mm. Manufactured in the highest quality marine grade, AISI 316 stainless steel, protecting against high levels of corrosion. 20-year warranty.
Product specification	Dimension: 50x58x47,5mm Diameter: Ø50mm Material: stainless steel AISI 316 Surface finish: satin grain 320, crafted by hand 20-year warranty (5 years for coated items)

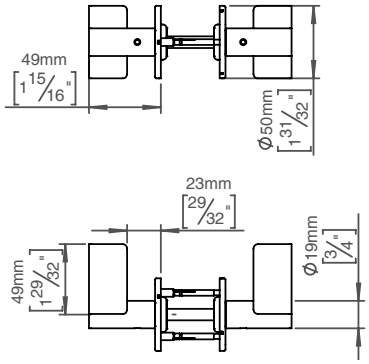

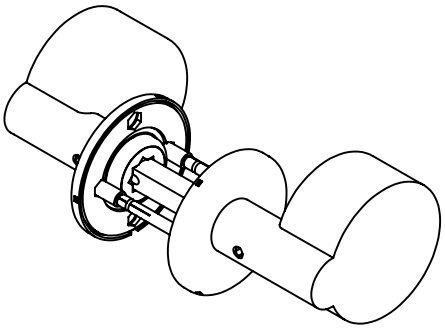

Available finishes

Solid metal: Satin steel, Polished steel

PVD: Charcoal, Gunmetal, Copper, Brass

Powder coated: White, Black, Pale telegrey, Grey

Super matt black, Super matt white

Spare parts/ accessories

Mounting	https://dline.com/mounting-instructions/

Product care

d line products are produced in the highest quality marine grade AISI 316 stainless steel. To sustain the unique d line finish please follow the below instructions:

- Wash down the surfaces using soapy water or mild detergent
- Always thoroughly rinse off with clean water
- To complete the cleaning procedure dry/polish the surface with a soft dry cloth

Please do not use scouring powder, steel wool, chloride based detergents or other aggressive cleaning products as these may damage the surface.
If spots or corrosion appear on the surface it is not due to the stainless steel quality, but to impurities in the environment, aggressive conditions or improper or insufficient cleaning.

d line Roskildevej 22 | DK-2620 Albertslund | dline.com | service@dline.com